REVISION HISTORY			
REV	DESCRIPTION	DATE & CHGD BY	APPROVED
-	RELEASED	08-12-08 LAW	CJD
A	ECN 6693, CORRECTED PART NUMBERING	01-06-09 LAW	

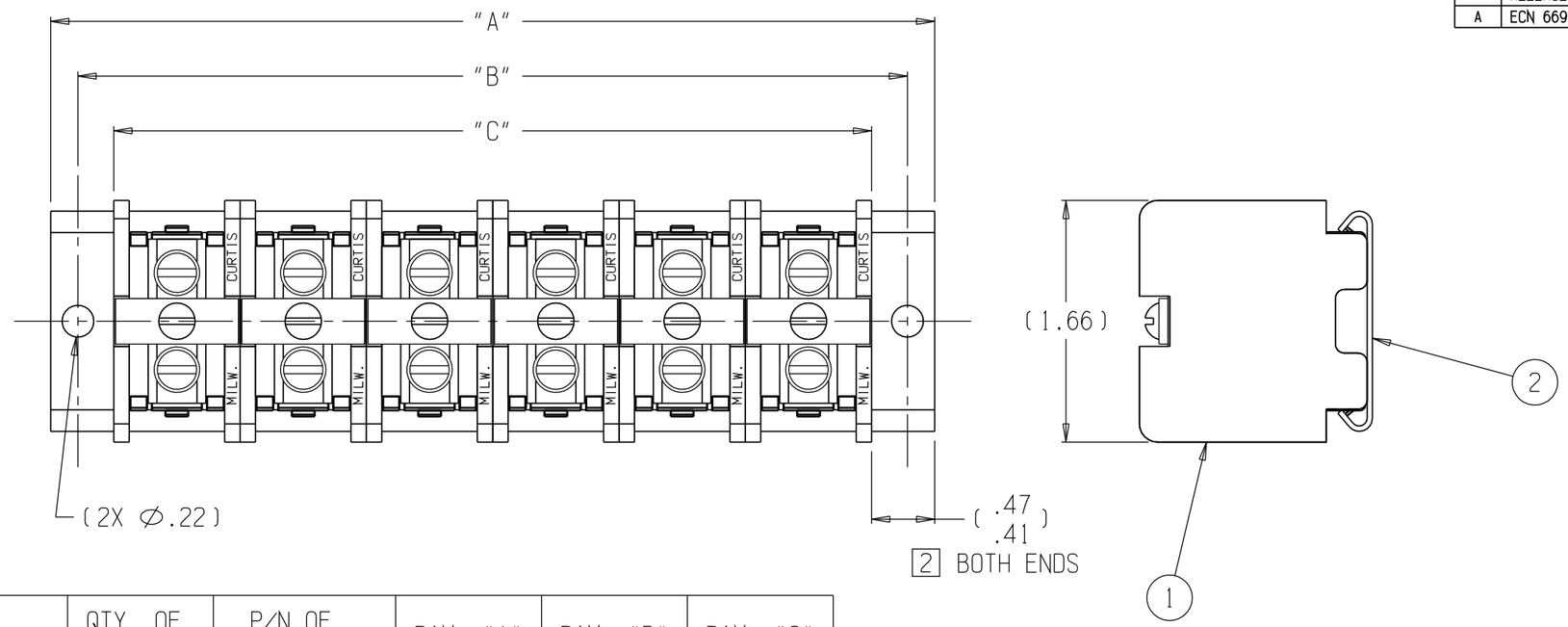

ASSY P/N (A)	QTY. OF MOLDINGS (ITEM 1)	P/N OF CHANNEL (ITEM 2)	DIM. "A" REF	DIM. "B" REF	DIM. "C" REF
271501000	1	082402700	1.688	1.312	0.869
271502000	2	082404700	2.563	2.187	1.738
271503000	3	082406700	3.438	3.062	2.607
271504000	4	082408700	4.313	3.937	3.476
271505000	5	082410700	5.188	4.812	4.345
271506000	6	082412700	6.063	5.687	5.214
271507000	7	082414700	6.938	6.562	6.083
271508000	8	082416700	7.813	7.437	6.952
271509000	9	082418700	8.688	8.312	7.821
271510000	10	082420700	9.563	9.187	8.690
271511000	11	082422700	10.438	10.062	9.559
271512000	12	082424700	11.313	10.937	10.428
271513000	13	082426700	12.188	11.812	11.297
271514000	14	082428700	13.063	12.687	12.166
271515000	15	082430700	13.938	13.562	13.035
271516000	16	082432700	14.813	14.437	13.904
271517000	17	082434700	15.688	15.312	14.773
271518000	18	082436700	16.563	16.187	15.642
271519000	19	082438700	17.438	17.062	16.511
271520000	20	082440700	18.313	17.937	17.380

NOTES:
1. INSERT TERMINAL BLOCKS (ITEM 1) ONTO CHANNEL (ITEM 2), KEEPING EACH BLOCK TIGHT AGAINST THE ADJACENT BLOCK.
2. CENTER BLOCKS ON CHANNEL SO SAME AMOUNT OF CHANNEL SHOWS ON BOTH ENDS.

QTY.	PART NO.	DESCRIPTION	ITEM
1	SEE TABLE	CHANNEL, WS, WT, WTC SERIES TERM BLK	2
SEE TABLE	088113000	PWH TERMINAL BLOCK ASSEMBLY	1

CONFIDENTIAL-PROPRIETARY TO CURTIS INDUSTRIES. NOT TO BE SHARED WITH THIRD PARTY WITHOUT WRITTEN PERMISSION FROM CURTIS INDUSTRIES

CAD FILENAME: 2715XX000 RevA B.prt
PREVIOUS P/N: NONE
SPECIAL INSTRUCTIONS: N/A
FINISH: N/A
MATERIAL: SEE B.O.M.

UNLESS OTHERWISE SPECIFIED DIMENSIONS ARE IN INCHES. TOLERANCES ARE:
DECIMALS .XX±.01 .XXX±.005
ANGLES ±0°30'

Curtis Industries
A Div. of Powers Holdings, Inc.
2400 South 43rd Street
Milwaukee, WI 53219
Phone: (414) 649-4200

TITLE: WH TERMINAL BLOCK ASSY, WITH CHANNEL

SCALE	DRAWN	CHECKED	DATE
1:1	LAW	C.J.DEBRAAL	08-12-08

SIZE B | SHT. 1 OF 1 | DWG NO. (A) 2715XX000 | REV. A